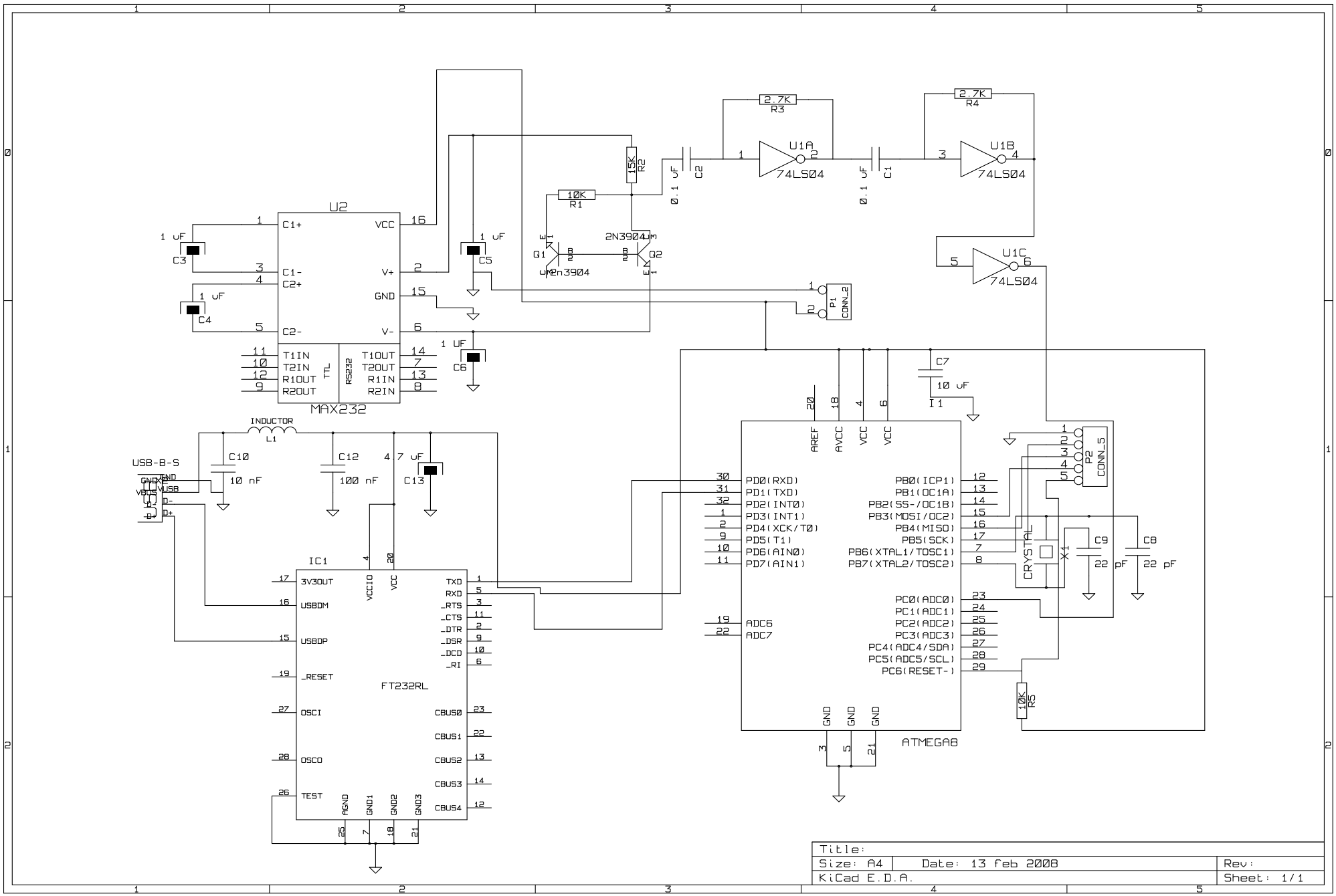
U2
C1+
C1-
C2+
C2-
VCC
V+
GND
V-
T1IN
T2IN
R1OUT
R2OUT
T1OUT
T2OUT
R1IN
R2IN
TTL
RS232
MAX232
C3
C4
C5
C6
1 uF
2.7K
R3
R4
15K
R2
10K
R1
0.1 uF
C2
C1
U1A
U1B
U1C
74LS04
2N3904
Q1
Q2
P1
CONN_2
C7
10 uF
I1
INDUCTOR
L1
C10
10 nF
C12
100 nF
C13
4.7 uF
USB-B-S
IC1
3V3OUT
VCCIO
VCC
USBDM
USBDP
_RESET
OSCI
OSCO
TEST
AGND
GND1
GND2
GND3
TXD
RXD
_RTS
_CTS
_DTR
_DSR
_DCD
_RI
CBUS0
CBUS1
CBUS2
CBUS3
CBUS4
FT232RL
AREF
AVCC
PD0(RXD)
PD1(TXD)
PD2(INT0)
PD3(INT1)
PD4(XCK/T0)
PD5(T1)
PD6(AIN0)
PD7(AIN1)
ADC6
ADC7
PB0(ICP1)
PB1(OC1A)
PB2(SS-/OC1B)
PB3(MOSI/OC2)
PB4(MISO)
PB5(SCK)
PB6(XTAL1/TOSC1)
PB7(XTAL2/TOSC2)
PC0(ADC0)
PC1(ADC1)
PC2(ADC2)
PC3(ADC3)
PC4(ADC4/SDA)
PC5(ADC5/SCL)
PC6(RESET-)
ATMEGA8
CRYSTAL
X1
C9
22 pF
C8
22 pF
P2
CONN_5
10K
R5
Title:
Size: A4
Date: 13 feb 2008
Rev:
KiCad E.D.A.
Sheet: 1/1